# 159AH-06020-ABC

## air-cooled motor / generator with 9.6 kW continuous power

This datasheet applies to part numbers: see page 2

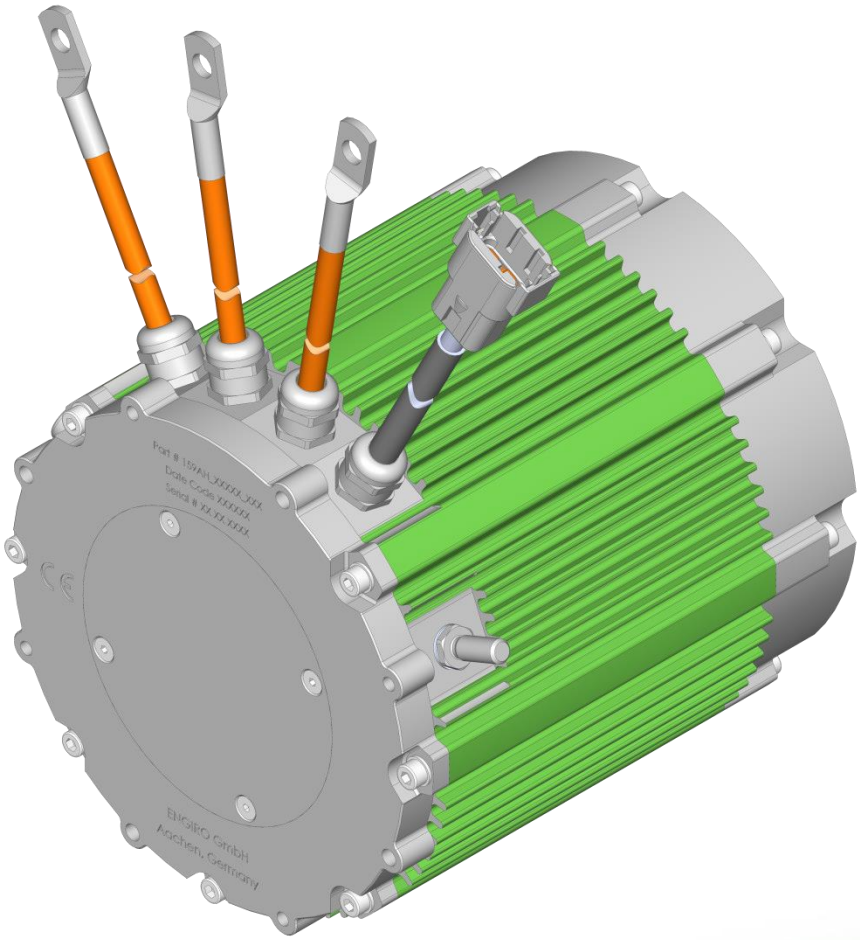

## KEY FEATURES

- permanent magnet synchronous machine
- air-cooled
- high peak power for motor applications
- convincing cost-benefit ratio
- recommended voltage range from 48 V to 200 V
- delivery with controller possible
- various mechanical interfaces available



ENGIRO GmbH · Avantisallee 51 · 52072 Aachen · Germany
Tel. +49 (0)241 99798-0 · E-Mail: engineering@engiro.de · www.engiro.de

# Table of Content


| Section | Page |
|---|---|
| Operating Range | 3 |
| Certifications | 4 |
| Available Type Variants | 5 |
| Technical Drawings | 6 |
| Performance Plots | 7 |


**Note:**

On September 1st , 2024, **we transferred our ERP systems to SAP**. Due to this change, **we are altering our current part numbers**. To see how our article numbers and motor naming scheme has changed, please consider the conversion table below:

| Part number conversion | | | | |
|---|---|---|---|---|
| **Part.no.** | **Old part.no.** | **Flange** | **Shaft** | **Position sensor** |
| 4752405 | 159AH_06020_BCR | B1 | C1 | R |
| 4832767 | 159AH_06020_BER | B1 | E1 | R |
| 4844589 | 159AH_06020_EDE | E1 | D1 | E |

**To be noted:**

**The information in this technical data sheet is based on our current knowledge and experience. Due to the wide range of possible influences during application, they do not exempt the processor and user from carrying out their own tests and trials. Although the suitability for a specific application can be estimated from our information, a legally binding assurance is by no means possible. Depending on the individual case, we recommend consultation with us. Any industrial property rights and applicable laws must be observed by the recipient of our products on his own responsibility.**

Data, including specifications, contained within this document are summary in nature and subject to change at any time without notice and are intended for general information only. Call for latest revision. All brand names and product names referenced are trademarks, registered trademarks, or trade names of their respective holders.



ENGIRO GmbH · Avantisallee 51 · 52072 Aachen · Germany
Tel. +49 (0)241 99798-0 · E-Mail: engineering@engiro.de · www.engiro.de

# Operating Range

ENGIRO HYDAC INTERNATIONAL

| Nominal Operation (S1, cooling as specified below) | | | | | | |
|---|---|---|---|---|---|---|
| Torque | $T_{nom}$ | | | | 20 | Nm |
| Power | $P_{nom}$ | | | | 9.6 | kW |
| Speed | $n_{nom}$ | | | | 4600 | rpm |
| Phase rms-current | $I_{nom}$ | | | | 113[1,2] | A |
| Battery voltage (DC) | $U_{nom}$ | | | | 96 | V |
| Electric frequency | $f_{el,nom}$ | | | | 384 | Hz |
| Power factor | cos(φ) | | | | 0.76 | |
| **Maximal Values (S2, 10s, cooling as specified below)** | | | | | | |
| Torque | $T_{max}$ | | | | 74 | Nm |
| Power | $P_{max}$ | | | | 26 | kW |
| Phase rms-current | $I_{max}$ | | | | 500[2] | A |
| Battery voltage (DC) | $U_{max}$ | | | | 200 | V |
| Speed | $n_{max}$ | | | | 8000 | rpm |
| Electric frequency | $f_{el,\ max}$ | | | | 667 | Hz |
| **Electrical Data** | | | | | | |
| Number of phases | | | | | 3 | |
| Number of pole pairs | | | | | 5 | |
| Maximal efficiency | | | | | 95 | % |
| *T/I* constant ($I<I_{nom}$) | | | | | 0.20 | $Nm/A_{rms}$ |
| *U/n* constant (AC) | | rms: | 11.3 | peak: | 17.5 | V/(1000rpm) |
| $K_e$ constant (AC) | | rms: | 0.022 | peak: | 0.033 | $V/(rad*s^{-1})$ |
| **Additional Data** | | | | | | |
| Rotor moment of inertia | | | | | EDE: 0.0062; BER,BCR: 0.0052 | kg*m² |
| Maximal motor temperature | | | | | 140 | °C |
| Allowed ambient temperature | | | | | -20 … 85 | °C |
| Cooling (medium, flow rate, inlet temperature, pressure) | | | | | air, >12 m/s, ≤ 25°C | |
| Temperature monitoring | | | | | 1 x KTY84-130 | |
| Customs tariff number | | | | | 8501 5230 | |
| **Connectors** | | | | | | |
| Power terminals | | | | | 3 x AWG 4 (21 mm²) cables with M8 cable lugs | |
| Length power cables | | | | | 50 | cm |
| Signal connectors | | | | | Deutsch DTM04-08PA 8 pins | |

[1] Nominal current strongly dependent on cooling as specified below.
[2] The cables must not exceed a temperature of 140 °C at any time. Temperature and service life depend on the installation condition.
[3] Please note that the IP6K9K rating is only valid if the machine is installed with suitable cable glands and an appropriate sealed interface at the drive side of the motor (flange and/or shaft). Please contact ENGIRO for further questions.

Data, including specifications, contained within this document are summary in nature and subject to change at any time without notice and are intended for general information only. Call for latest revision. All brand names and product names referenced are trademarks, registered trademarks, or trade names of their respective holders.



ENGIRO GmbH · Avantisallee 51 · 52072 Aachen · Germany
Tel. +49 (0)241 99798-0 · E-Mail: engineering@engiro.de · www.engiro.de

# Certifications

| Certifications | | |
|---|---|---|
| **Type approval** | CE, EN 60034 | |
| **Salt mist** | Prepared for ISO 9227 | |
| **Protection grade** | ISO 20653 IP6K9K[1)] | |
| **Vibrations** | ISO 16750-3 | |
| **Customs tariff number** | 8501 5230 | |

1) Please note that the IP6K9K rating is only valid if the machine is installed with suitable cable glands and an appropriate sealed interface at the drive side of the motor (flange and/or shaft). Please contact ENGIRO for further questions.

Data, including specifications, contained within this document are summary in nature and subject to change at any time without notice and are intended for general information only. Call for latest revision. All brand names and product names referenced are trademarks, registered trademarks, or trade names of their respective holders.



ENGIRO GmbH · Avantisallee 51 · 52072 Aachen · Germany
Tel. +49 (0)241 99798-0 · E-Mail: engineering@engiro.de · www.engiro.de

# Available Type Variants

| Shaft and Flange Combinations for 159AH-06020-ABC | | Flange (A) | |
|---|---|---|---|
| | | **B1** (Gearbox Allweier PGR 1500) | **E1** (IEC B14, Ø95 mm centering) |
| **Shaft (B)** | **C1** (Shaft with external helical splines fitting PGR 1500 Gearbox[1)]) | ● (≈ 14 kg) | |
| | **D1** (Cylindrical shaft with keyway Ø19mm) | | ● (≈ 15 kg) |
| | **E1** (Extended shaft with external helical splines fitting PGR 1500 Gearbox[1)]) | ● (≈ 14 kg) | |
| **Position Sensor (C)** | | E: Sin/cos encoder<br>R: Resolver | |

Other individual combinations are also possible on request.

1) Only fitting for a gear ratio of 19.3:1

Data, including specifications, contained within this document are summary in nature and subject to change at any time without notice and are intended for general information only. Call for latest revision. All brand names and product names referenced are trademarks, registered trademarks, or trade names of their respective holders.



ENGIRO GmbH · Avantisallee 51 · 52072 Aachen · Germany
Tel. +49 (0)241 99798-0 · E-Mail: engineering@engiro.de · www.engiro.de

# Technical Drawings

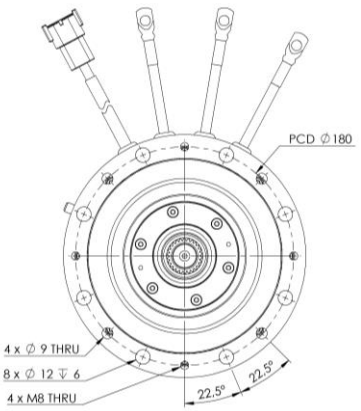


**Flange B1**

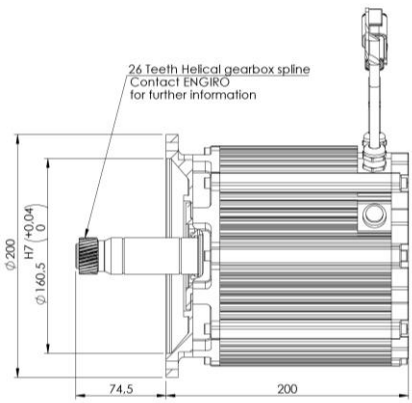


**Shaft E1**

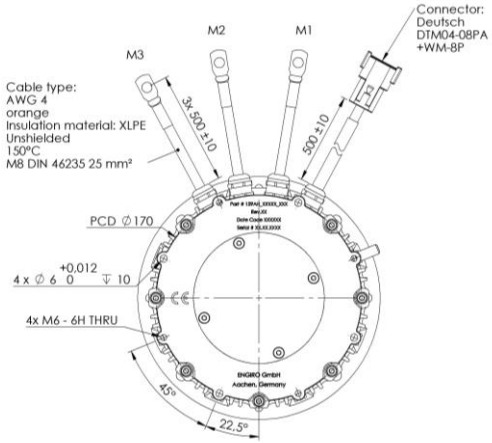


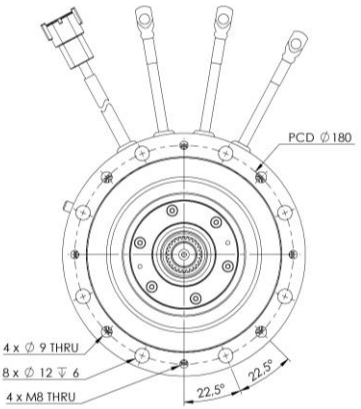


**Flange B1**

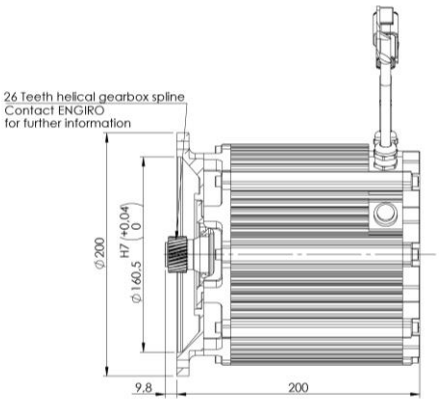


**Shaft C1**

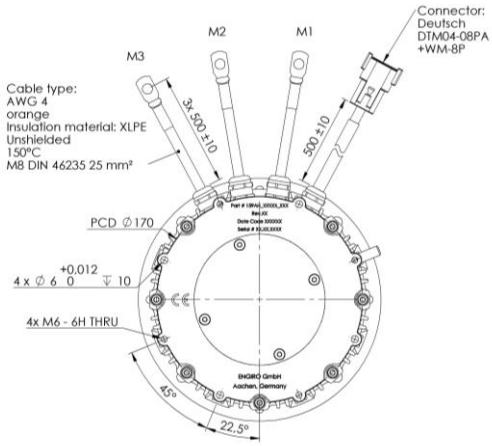


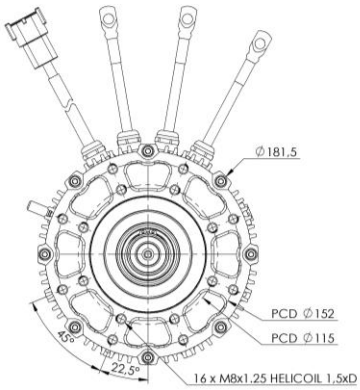


**Flange E1**

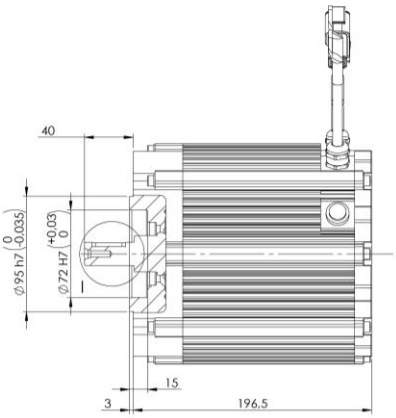


**Shaft D1**

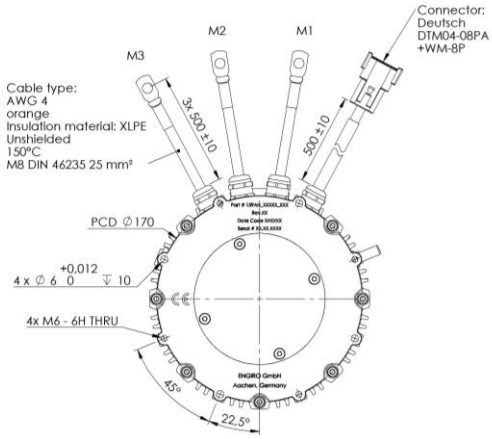


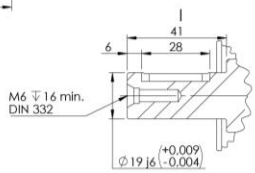


Data, including specifications, contained within this document are summary in nature and subject to change at any time without notice and are intended for general information only. Call for latest revision. All brand names and product names referenced are trademarks, registered trademarks, or trade names of their respective holders.



ENGIRO GmbH · Avantisallee 51 · 52072 Aachen · Germany
Tel. +49 (0)241 99798-0 · E-Mail: engineering@engiro.de · www.engiro.de

# Performance Plots

ENGIRO HYDAC INTERNATIONAL

## Simulated Efficiency of Motor Application

(electric machine only; $U_{nom}$ = 96 V)

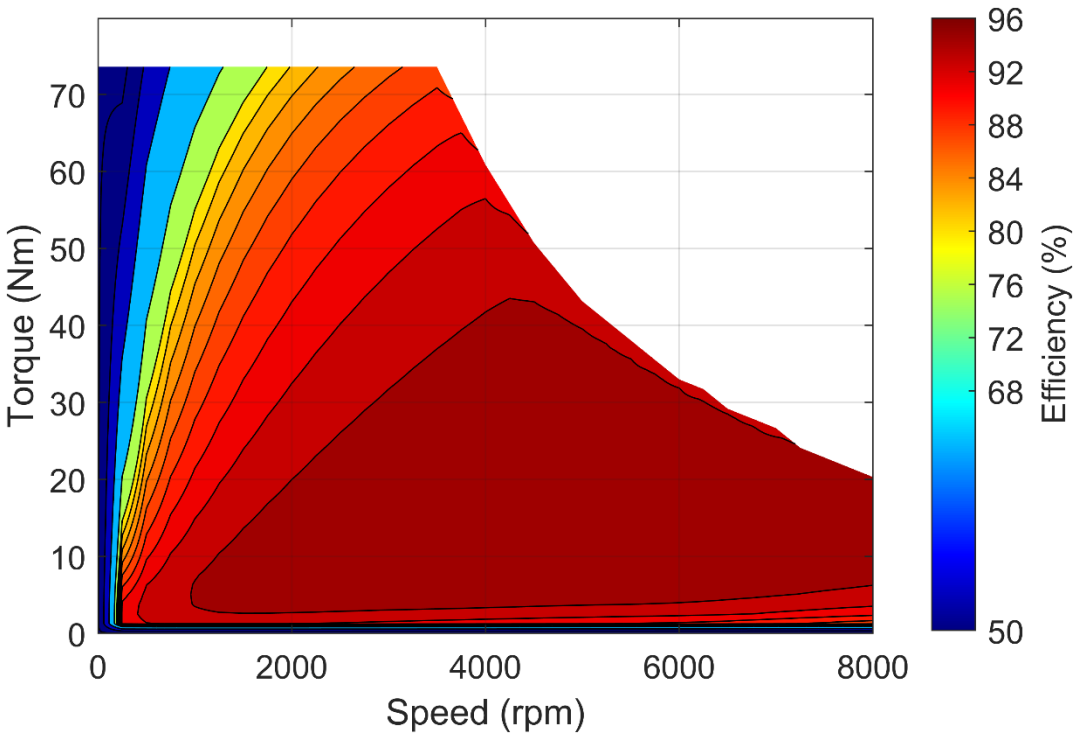


## Simulated Characteristic Motor Parameters

$U_{nom}$ = 96 V

solid lines: continuous; dashed lines: maximum;

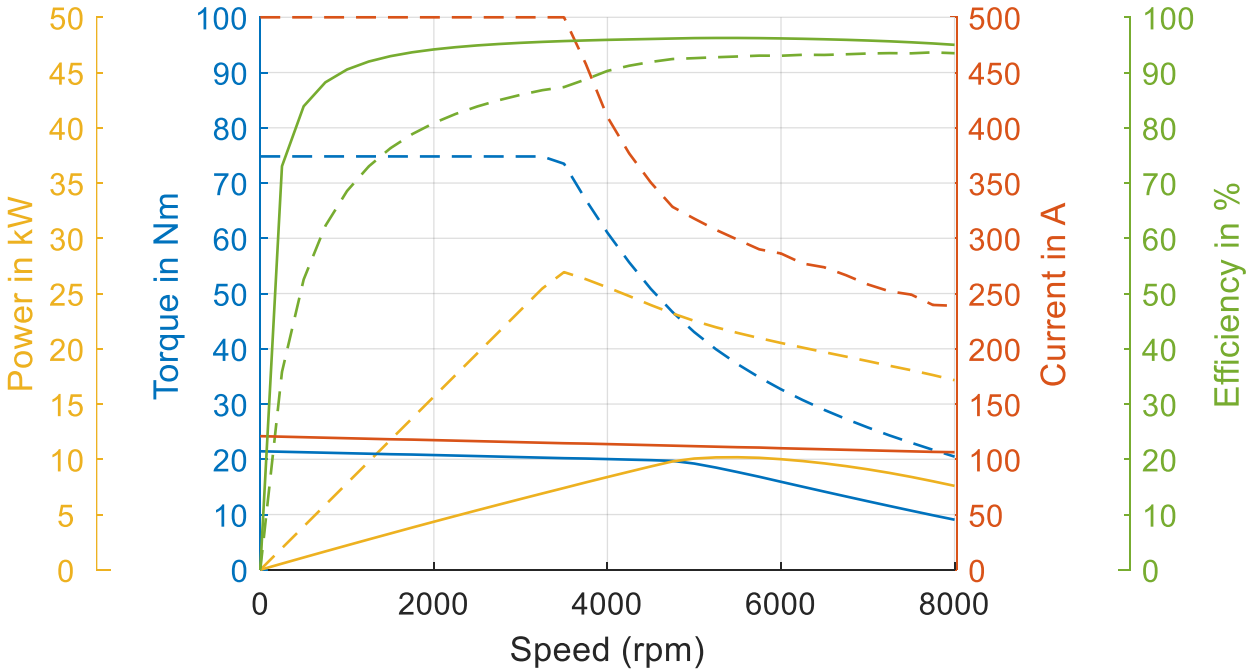


Data, including specifications, contained within this document are summary in nature and subject to change at any time without notice and are intended for general information only. Call for latest revision. All brand names and product names referenced are trademarks, registered trademarks, or trade names of their respective holders.



ENGIRO GmbH · Avantisallee 51 · 52072 Aachen · Germany
Tel. +49 (0)241 99798-0 · E-Mail: engineering@engiro.de · www.engiro.de